# Series 3826

Direct Acting
Multiple Function

The Spartan Scientific Series 3826 is a unique answer to inert gas and liquid Mixing, Diverting and media control. Designed for the “feed and bleed” control of linear actuators, the 3826, in conjunction with position feedback and an electronic circuit, can fill and remove gas or liquid from a linear actuator to accomplish linear positioning. In another configuration, the valve can mix two media, at different flow rates, independently or shut off as the need arises. The 3826 incorporates two orifice baskets which accommodate flow rates from 0.02 to 0.31 Cv for a custom flow requirement. The valve employs two 2-Way operators which function as a 3-Way, 3-Position blocked center, or two 3-Way operators which function as a 4-Way, 3-Position exhaust center valve. The 3826 operators are designed with spring compensated valve seats for long trouble free life. Operators are available in all standard elastomers with all stainless or brass and stainless guide tubes. Coils are available with spades for DIN connectors or flying-lead termination. The valve body has integrated 1/4” tubing quick connect fittings and is made of Acetal resin.

## Dimensional Data

ALL DIMENSIONS ARE IN INCHES UNLESS OTHERWISE NOTED

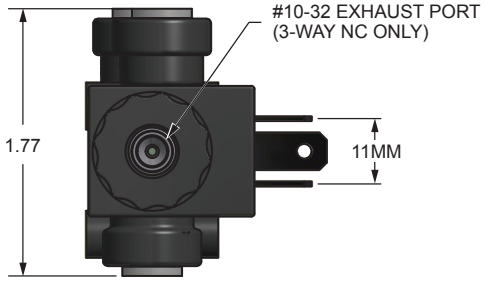


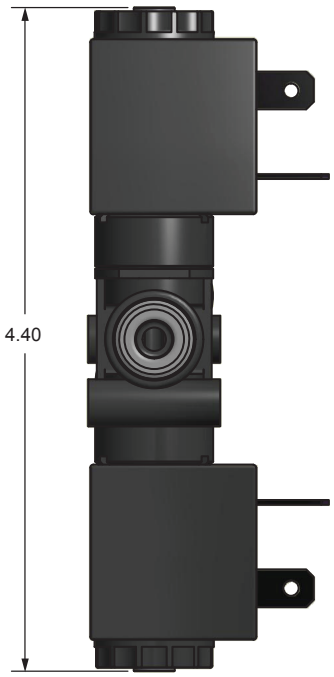


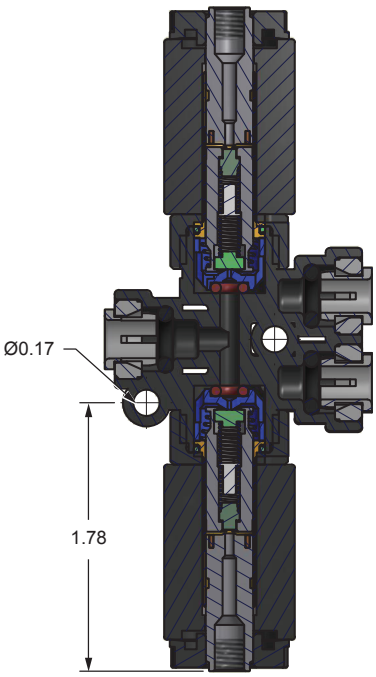


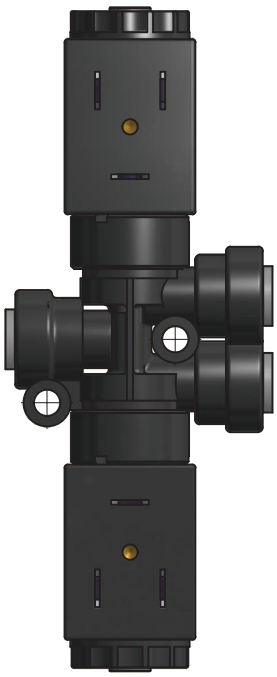

DIRECT ACTING



SPARTAN SCIENTIFIC
P.O. Box 9792 • Boardman, Ohio 44513
PH: (855)629-4648 • Fax: (330)758-3314
www.spartanscientific.com

# Series 3826

Direct Acting
Multiple Function

## Technical Data

**Function:** 3-Way, 3-Position; Direct Acting; Diverting, Mixing, Normally Closed or Normally Open
3-Way, 4-Position; Direct Acting; Diverting, Mixing, Normally Closed or Normally Open
4-Way, 3-Position; Direct Acting; Diverting, Mixing, Normally Closed or Normally Open

**Port Size:** 1/4" O.D. John Guest tube cartridges (3)

**Orifice Sizes / Flow Factor:**
0.6mm / 0.02 Cv
0.8mm / 0.03 Cv
1.0mm / 0.05 Cv
1.2mm / 0.06 Cv
1.5mm / 0.08 Cv
2.0mm / 0.17 Cv
2.4mm / 0.24 Cv
3.0mm / 0.31 Cv

**Pressure Range:** Vacuum to 150 psi (depending on orifice size and function)

**Temp. Range:** Fluid Max.: +60°C
Dry Range: Ambient +10° to +50°C

**Response Time:** 14 to 20ms Complete Cycle

**Media:** Air, light oils, potable water, water (contact factory for compatibilities)

**Environment Protection:** IP65 (IEC 144), NEMA 4
Dust-tight and water resistant (with electrical connector)

**Mounting:** 0.170 diameter through holes as shown

**Wetted Materials:** Elastomers: EPDM, FKM, NBR (others available on request)
Operator: 400 Series Stainless Steel and Brass (others available on request)
Shading Ring: Copper (AC Only)
Springs: 300 Series Stainless Steel
Valve Body: Acetal Resin

**Coil Data:** Duty Cycle: Continuous (within specifications)
Encapsulation: Glass-Filled Nylon
Insulation: Class F
Power Rating: 6.5 Watt VDC, 8.5VA (others available on request)
Voltage: 6, 12, 24 VDC
24, 120, 220, 240 VAC 50/60 Hz
Voltage Tolerance: +/- 10% Nominal
Winding: Class H

**Connections:** Spades: Terminals AMP 6.3x0.8 width 11mm (Available in DIN 43650 Form "A" / ISO 4400, N175301-803:2006 for 3.0mm orifice or larger)
Flying Lead: PVC 22 AWG, Multi-Strand Copper Wire, 300V, 12" minimum length

**Packaged Weight:** 22mm Coil: 0.46 lbs.
30mm Coil: 0.75 lbs.



## Principles of Operation and Application

**OPTION 1:**
**Direct Acting, 3-Way, 3-Position, Blocked Center, Feed and Bleed**

This version of the 3826 is made to fix or change position and or pressure applied to a single acting linear actuator.

- Both solenoids de-energized, pressure enters the valve through port "A" and is blocked. Ports "B" and "C" are also blocked.
- Energize solenoid 2 and pressure flows from "A" to "C" filling the actuator.
- De-energization of solenoid 2 blocks the pressure in the actuator holding its position.
- Energizing solenoid 1 connects port "C" with port "B", relieving the pressure in the actuator and dropping the actuator position.
- The solenoids can be alternately energized and de-energized to attain precise positioning of the actuator. Pressure can then be used in conjunction with closed loop sensing and a comparator circuit.

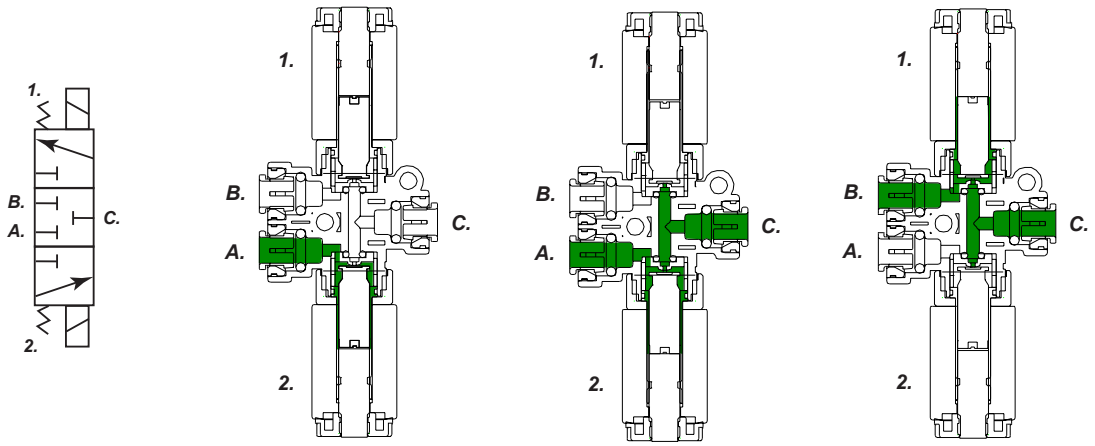


SPARTAN SCIENTIFIC
P.O. Box 9792 • Boardman, Ohio 44513
PH: (855)629-4648 • Fax: (330)758-3314
www.spartanscientific.com

**OPTION 2:**

**Direct Acting, 3-Way, 3-Position, Blocked Center, Diverting**

This valve is made to control a single media and divert it into two different locations. Media is presented to port "C" and diverted to ports "B" and "A".

- Pressure / media enters through port “C” and is normally blocked.
- Energization of solenoid 1 connects port “C” to port “B”.
- De-energization of solenoid 1 blocks media flow once again.
- Energization of solenoid 2 connects port “C” to port “A” effectively Diverting the same media to another location.

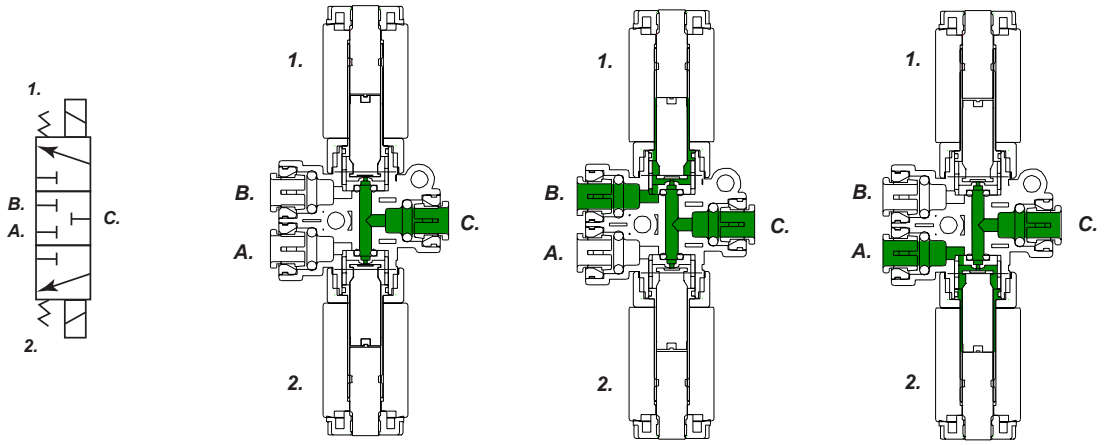




**OPTION 3:**

**Direct Acting, 3-Way, 3-Position, Blocked Center, Mixing (or Function)**

This valve is made to control two separate and distinct Medias. The two Medias will be presented to ports “B” and “A” separately.

- Pressure/media entering through ports “B” and "A" is normally blocked.
- Energization of solenoid 1 connects port “B” to port “C”.
- De-energization of solenoid 1 blocks media flow once again.
- Energization of solenoid 2 connects port “A” to port “C”.
- De-energization of solenoid 2 blocks media flow once again

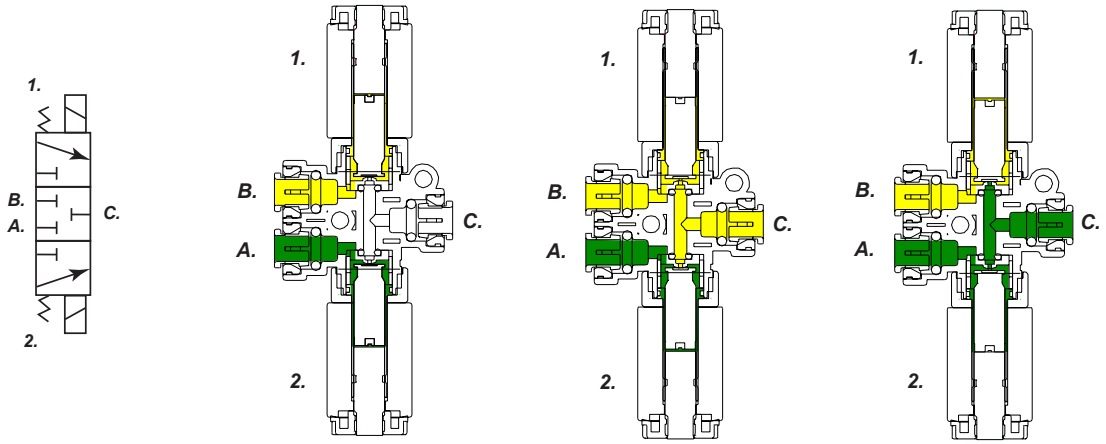




SPARTAN SCIENTIFIC
P.O. Box 9792 • Boardman, Ohio 44513
PH: (855)629-4648 • Fax: (330)758-3314
www.spartanscientific.com

**OPTION 4:**

**Direct Acting, 4-Way, 3-Position, Exhaust Center, Directional Control**

This configuration is most often used to control the flow of air to a double acting, linear actuator. The valve features an exhaust middle position.

- Solenoid 1 and solenoid 2 are de-energized; pressure is blocked on port "C". Ports "A" and "B" are connected to exhaust (atmosphere).
- Solenoid 1 is energized, pressure is connected from port "C" to port "B". Air from the actuator is then forced through port "A" to the exhaust port "S" to atmosphere.
- When solenoid 2 is energized, pressure is connected from port "C" to port "A" shifting the actuator into it other position. The pressure trapped in the downstream side of the actuator travels through the "B" port to exhaust port "R" to atmosphere.

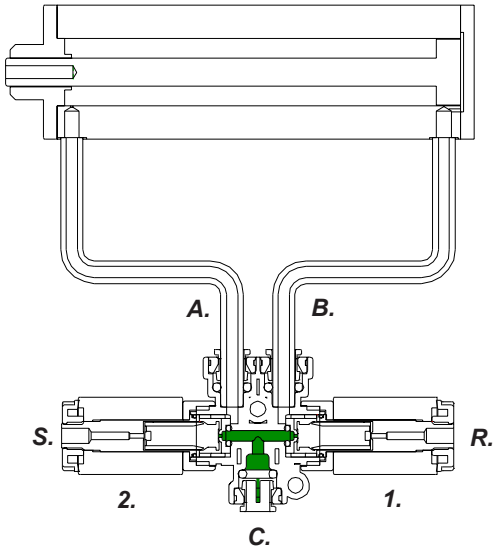


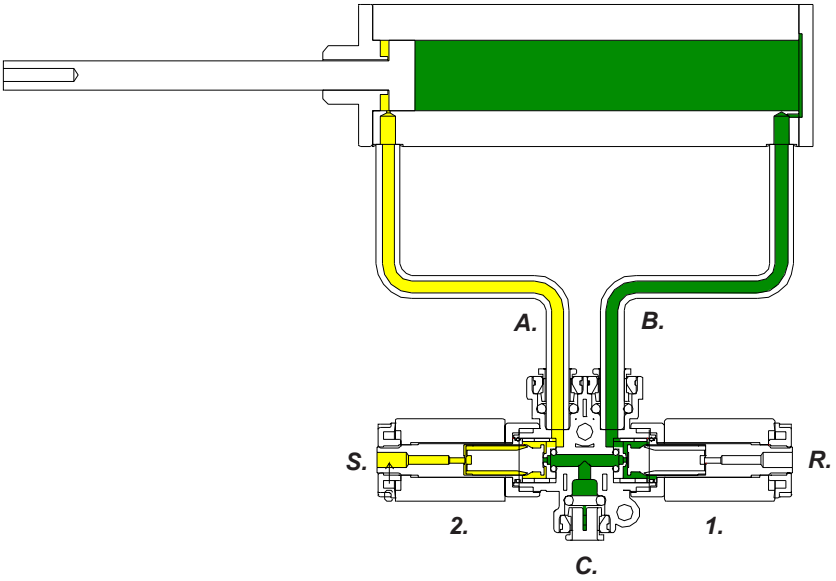


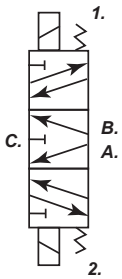


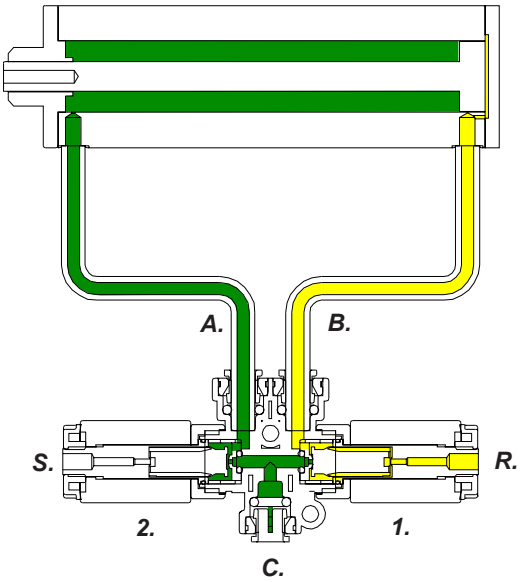

**OPTION 5:**

**Direct acting, 3-Way, 4-Position, Blocked Center, Flow Multiplication**

Flow multiplication can be accomplished by tailoring orifice sizes to media flow rates, (both main valve orifices), as needed assuming the same media at ports “B” and “A”.

- Solenoids de-energized all ports are blocked.
- Energization of solenoid 1 connects port “B” to port “C” at a specified flow rate dependent on orifice chosen.
- Energization of solenoid 2 connects media from port “A” to port “C” at a specific flow rate depending on orifice chosen.
- Simultaneous energization of solenoids 1 and 2 with effectively multiplies flow through port “C” by the sum of the orifice from “B” and “A”. Either solenoid can then be de-energized at any time to tailor the flow rates desired. In this way the valve acts as a digital flow control.

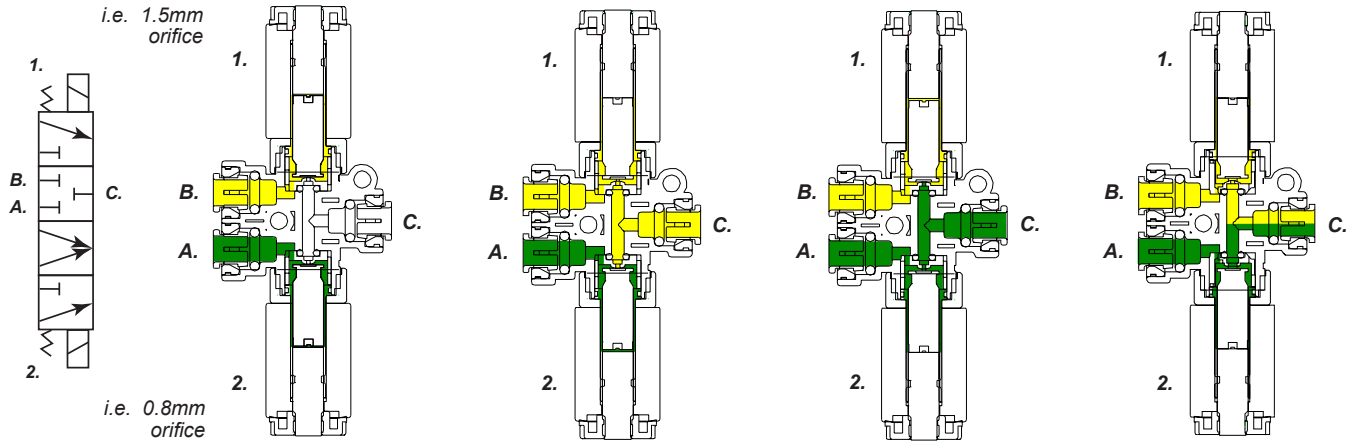


**OPTION 6:**

**Direct acting, 3-Way, 4-Position, Blocked Center, Mixing**

Assume that two different media are plumbed to ports “B” and “A”. Selective energization of solenoid 1 and solenoid 2 flow each media through common port “C”.

- De-energization of solenoids blocks media to all ports.
- Energization of solenoid 1 connects port “B” and port “C”.
- Energization of solenoid 2 connects port “A” and port “C”.
- Simultaneous energization of solenoid 1 and 2 connect port “B” and “A” with port “C”. Simultaneous energization of solenoids effectively mixes the two medias through port “C”. This also assumes that the pressures of each media are the same.

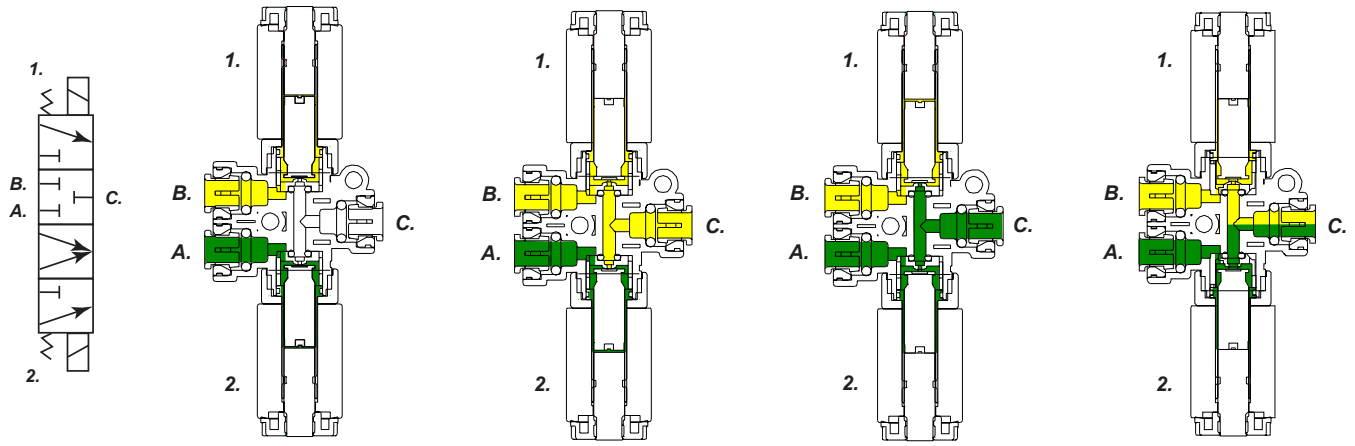

## How To Order

3826 - □ - □ □ - □ □ C □

**Seat Material**
0 - FKM
B - NBR
E - EPDM

**Orifice "A"**
1 - 0.6 mm
2 - 1.0 mm
3 - 1.2 mm
4 - 1.5 mm
5 - 2.0 mm
6 - 2.4 mm
7 - 3.0 mm*
8 - 0.8 mm

**Orifice "B"**
1 - 0.6 mm
2 - 1.0 mm
3 - 1.2 mm
4 - 1.5 mm
5 - 2.0 mm
6 - 2.4 mm
7 - 3.0 mm*
8 - 0.8 mm

**Materials in Contact with Media**
A - Brass / Nylon
B - Stainless Steel / Nylon

**Option**
1 - Option 1 (3/3 Feed and Bleed)
2 - Option 2 (3/3 Diverting)
3 - Option 3 (3/3 Mixing)
4 - Option 4 (4/3 Directional Control)
5 - Option 5 (3/4 Flow Multiplication)
6 - Option 6 (3/4 Mixing)

**Coil Options**
1 - 6 VDC DIN
2 - 12 VDC DIN
3 - 24 VDC DIN
6 - 24 VAC 50/60 Hz
7 - 120 VAC 50/60 Hz
8 - 220 VAC 50/60 Hz
9 - 240 VAC 50/60 Hz

Order Example: 3826-0-12-A3C7
FKM, 0.6 mm orifice "A", 1.0 mm orifice "B",
Brass / Nylon, 3/3 Mixing, 120 VAC 50/60 Hz

*3.0mm uses 30mm coil.